UBA180LEG2
LEGATO 180x80

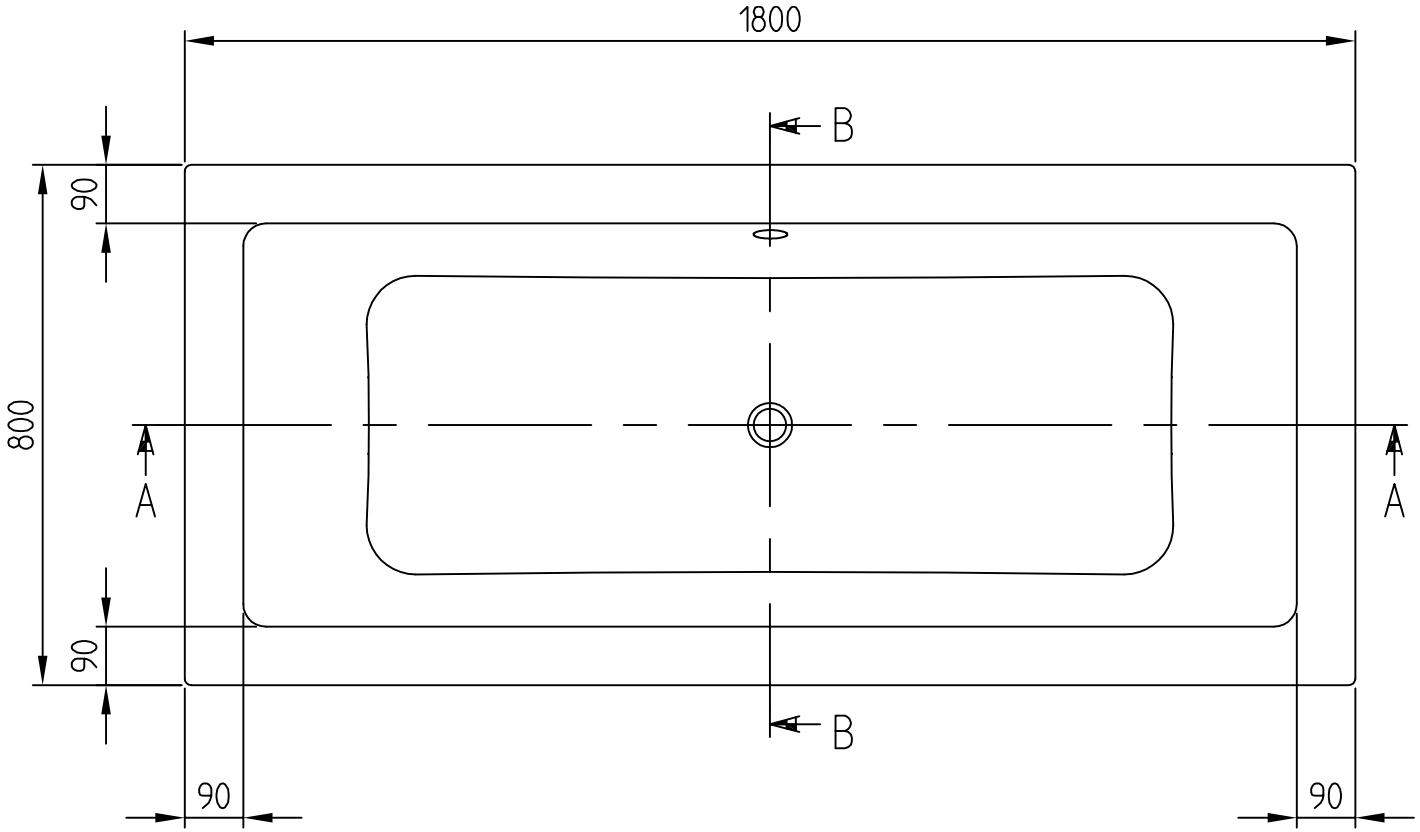

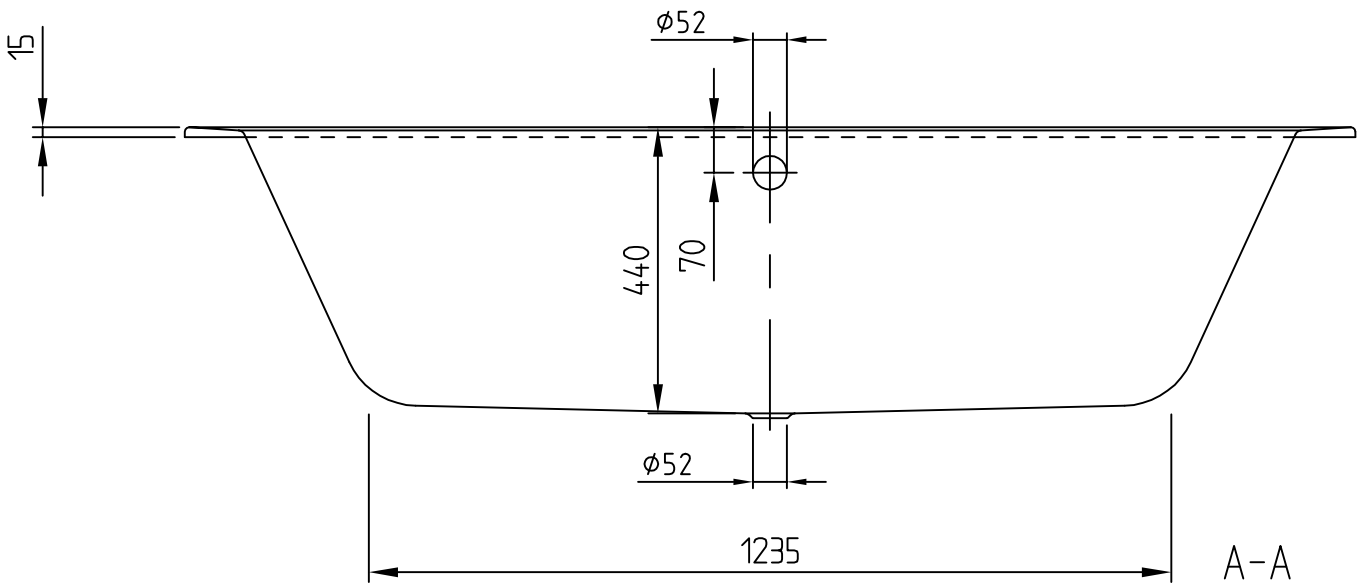

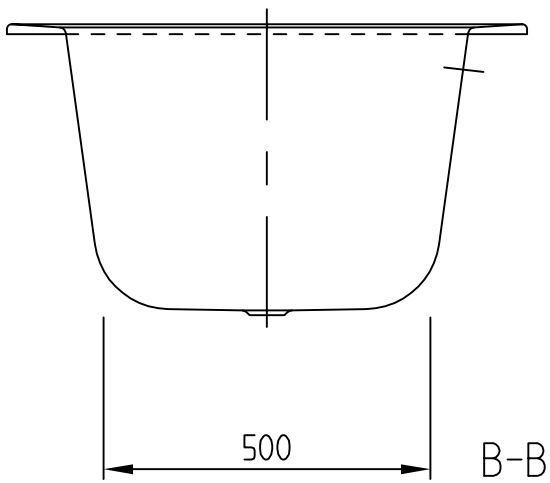

Villeroy & Boch
1748

- This drawing is for information only.
- Dimensions on the actual product can deviate from this drawing.
- Claims about wrong dimensions on product or drawing will not be accepted.